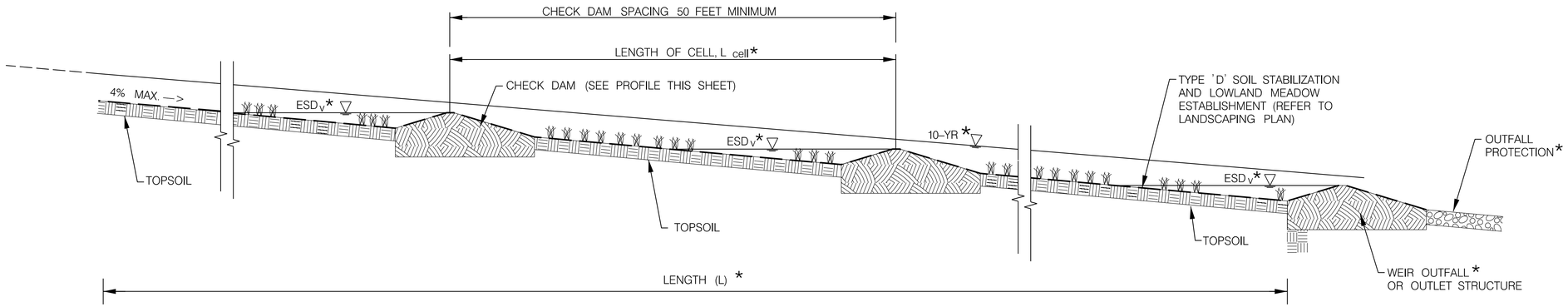

WET SWALE PROFILE

NOT TO SCALE

SHOW ENTIRE PROFILE AS DESIGNED

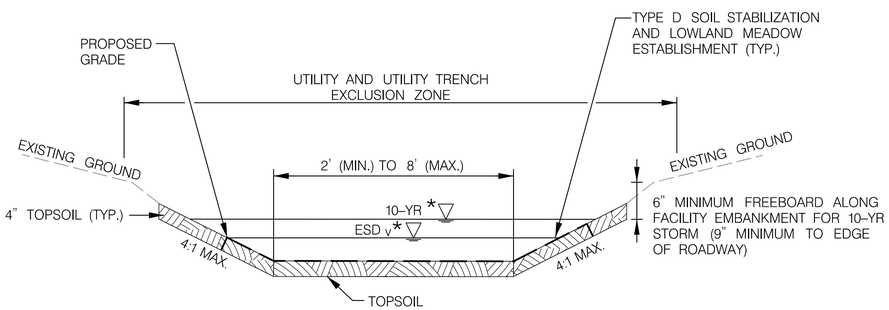

WET SWALE TYPICAL SECTION

NOT TO SCALE

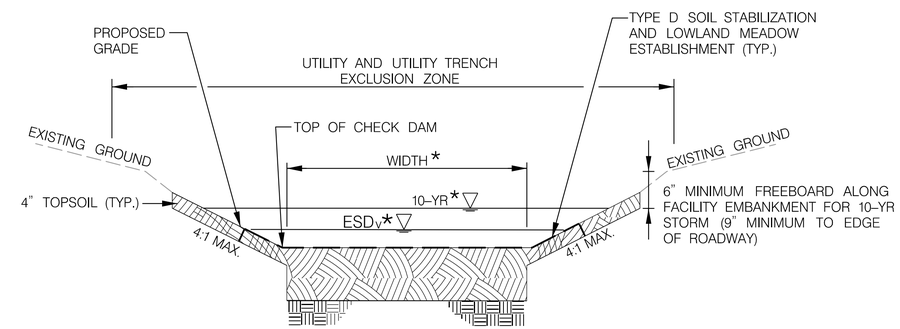

WET SWALE TYPICAL SECTION AT CHECK DAM

NOT TO SCALE

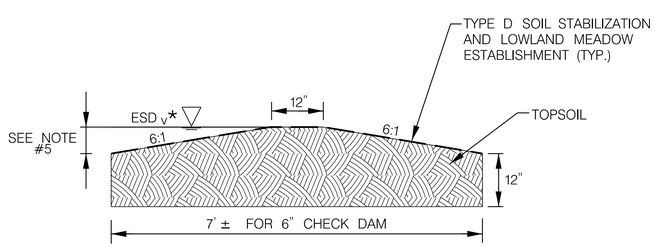

CHECK DAM PROFILE

NOT TO SCALE

DESIGNER NOTES:

1. REFER TO SECTION 316 OF THE MDOT SHA STANDARD SPECIFICATIONS FOR CONSTRUCTION AND MATERIALS FOR MORE INFORMATION.
2. INCLUDE SWMFAC NUMBER ON SWM SHEETS.
3. MUST ALSO BE DESIGNED TO CONVEY 10-YR FLOW AT NON-EROSIVE VELOCITIES.
4. USE EITHER SALVAGED OR FURNISHED TOPSOIL BASED ON THE AMOUNT OF EXISTING TOPSOIL WITHIN PROJECT LIMITS.
5. MAXIMUM CHECK DAM HEIGHT IS 12 INCHES BEYOND THE CLEAR ZONE. WITHIN THE CLEAR ZONE CHECK DAM HEIGHT IS LIMITED TO 6 INCHES. CHECK DAM HEIGHTS WITHIN THE CLEAR ZONE MAY INCREASE TO 12 INCHES WITH VERIFICATION FROM THE DESIGNER THAT THE CHECK DAM IS NOT A ROADSIDE HAZARD.
6. MAX. LONG. SLOPE ALONG CHECK DAM IS 6:1 IN CLEAR ZONE AND 4:1 BEYOND.
7. MINIMUM LENGTH BETWEEN CHECK DAMS: 50'
8. BOTTOM WIDTH: 2'-8'
9. UTILITY (INCLUDING GUY-WIRES) AND UTILITY TRENCH EXCLUSION ZONE EXTENDS A MINIMUM OF 10 FEET FROM THE BOTTOM OF MEDIA. 10 FEET FROM TOP OF EMBANKMENT IS PREFERABLE.
10. SET CHECK DAM TOP ELEVATION TO ESDv ELEVATION.
11. REFER TO BIOSWALE DESIGN GUIDANCE DRAWING FOR POORLY DRAINING SOILS FOR EXAMPLE OF INLET STRUCTURE AT OUTFALL.
12. THE WET SWALE BOTTOM SHOULD INTERCEPT THE SEASONAL HIGH WATER TABLE AT LEAST ONE POINT ALONG ITS LENGTH.

* DETERMINE BY DESIGN

MARYLAND DEPARTMENT OF TRANSPORTATION
STATE HIGHWAY ADMINISTRATION

DESIGN GUIDANCE DRAWING

M-8 WET SWALE

REVISION DATE: JUNE 1, 2022

*** NOTE: THIS DRAWING IS ONLY TO BE USED AS A DESIGN GUIDE AND IS NOT A SUBSTITUTE FOR PROJECT-SPECIFIC PROFILES AND SECTIONS IN CONTRACT DOCUMENTS***