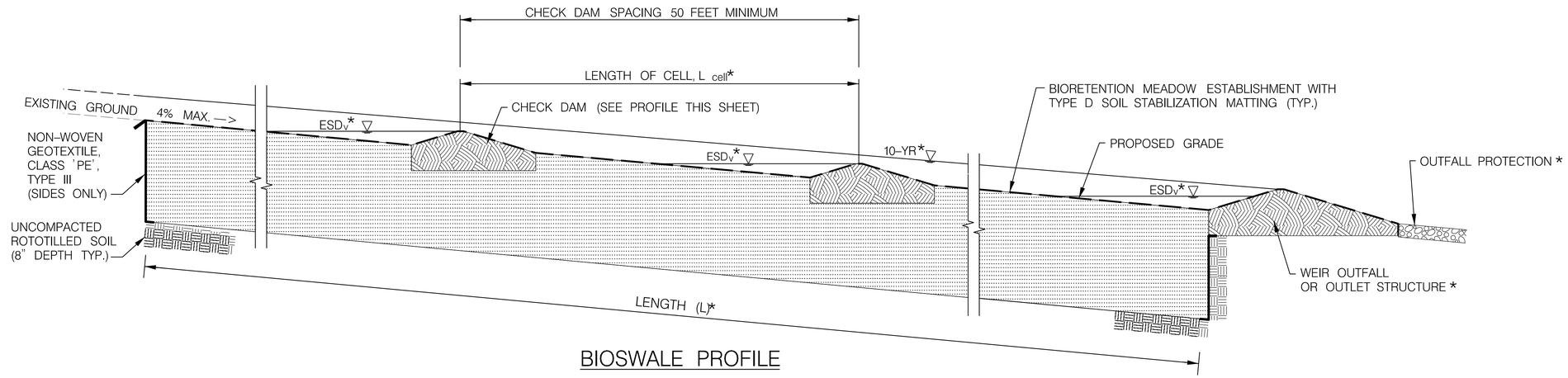


## BIOSWALE PROFILE

*SHOW ENTIRE PROFILE AS DESIGNED*

NOT TO SCALE

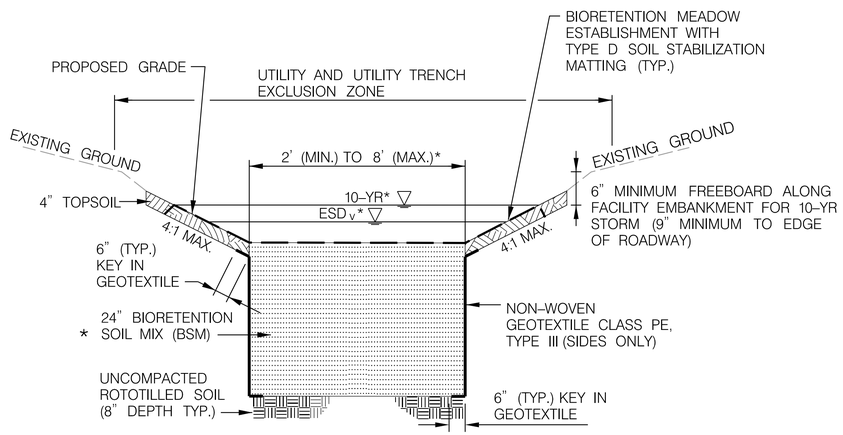


## BIOSWALE TYPICAL SECTION

NOT TO SCALE

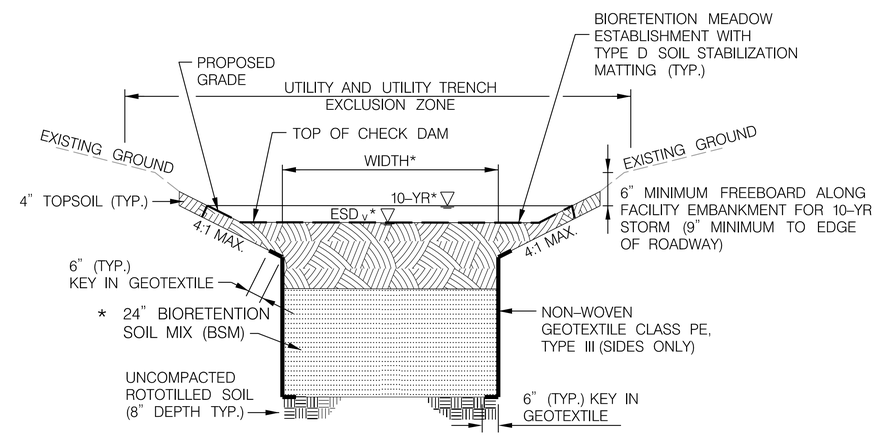


## BIOSWALE TYPICAL SECTION AT CHECK DAM

NOT TO SCALE

DESIGNER NOTES:

1. REFER TO SECTION 316 OF THE MDOT SHA STANDARD SPECIFICATIONS FOR CONSTRUCTION AND MATERIALS FOR MORE INFORMATION.
2. INCLUDE SWMFAC NUMBER ON SWM SHEETS.
3. DESIGN SWALES TO CONVEY 10–YR FLOW AT ON–EROSIVE VELOCITIES (<5 FPS).
4. MAXIMUM CHECK DAM HEIGHT IS 12 INCHES BEYOND THE CLEAR ZONE. WITHIN THE CLEAR ZONE CHECK DAM HEIGHT IS LIMITED TO 6 INCHES. CHECK DAM HEIGHTS WITHIN THE CLEAR ZONE MAY INCREASE TO 12 INCHES WITH VERIFICATION FROM THE DESIGNER THAT THE CHECK DAM IS NOT A ROADSIDE HAZARD.
5. MAXIMUM LONG. SLOPE ALONG CHECK DAM IS 6:1 WITHIN THE CLEAR ZONE AND 4:1 BEYOND CLEAR ZONE.
6. MINIMUM LENGTH BETWEEN CHECK DAMS: 50'
7. BOTTOM WIDTH: 2'–8'
8. UTILITY (INCLUDING GUY–WIRES) AND UTILITY TRENCH EXCLUSION ZONE EXTENDS A MINIMUM OF 10 FEET FROM THE BOTTOM OF MEDIA. 10 FEET FROM TOP OF EMBANKMENT IS PREFERABLE.
9. REFER TO 'BIOSWALE FOR POORLY DRAINING SOILS' DETAIL EXAMPLE OF INLET STRUCTURE AT OUTFALL.
10. REFER TO THE LANDSCAPING PLANS FOR PLANTINGS.

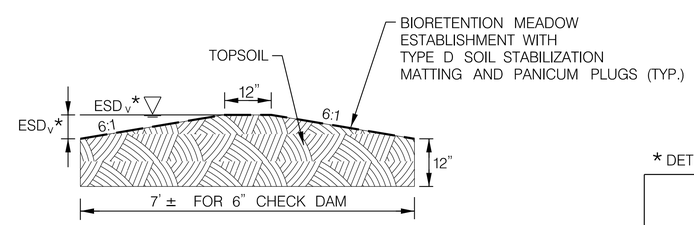


## CHECK DAM PROFILE

NOT TO SCALE

* DETERMINE BY DESIGN

MARYLAND DEPARTMENT OF TRANSPORTATION
STATE HIGHWAY ADMINISTRATION

DESIGN GUIDANCE DRAWING

M-8 BIOSWALE WITH CHECK DAMS WELL DRAINING SOILS

REVISION DATE: JUNE 1, 2022

*** NOTE: THIS DRAWING IS ONLY TO BE USED AS A DESIGN GUIDE AND NOT AS A SUBSTITUTE FOR PROJECT-SPECIFIC PROFILES AND SECTIONS IN CONTRACT DOCUMENTS***