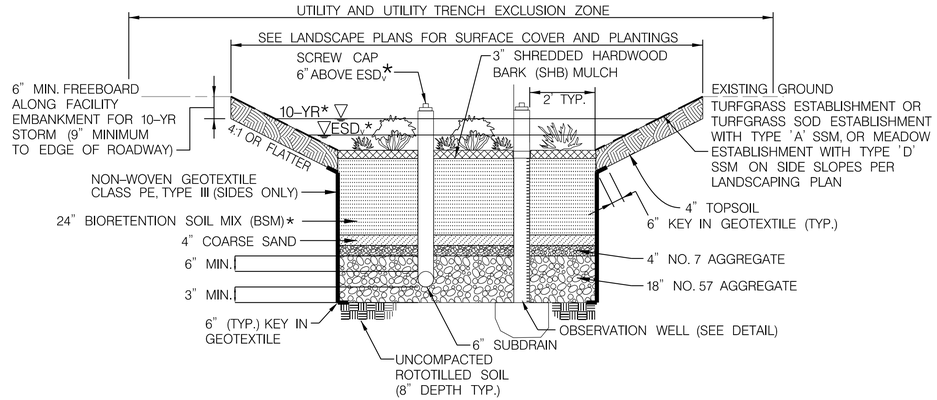

MICRO-BIORETENTION TYPICAL SECTION

NOT TO SCALE

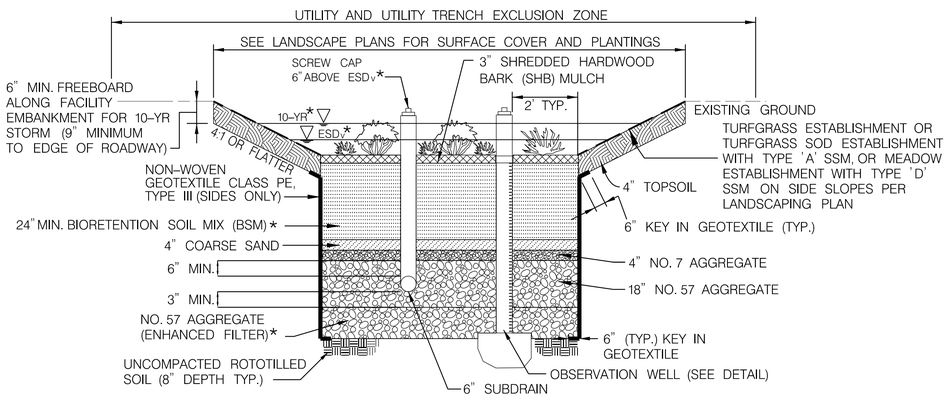

MICRO-BIORETENTION WITH ENHANCED FILTER TYPICAL SECTION

NOT TO SCALE

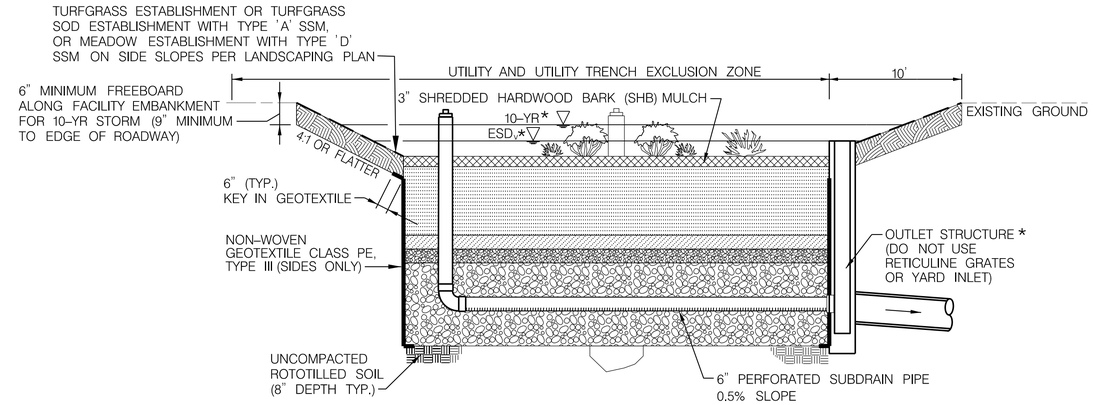

MICRO-BIORETENTION PROFILE WITH PIPE OUTFALL

NOT TO SCALE

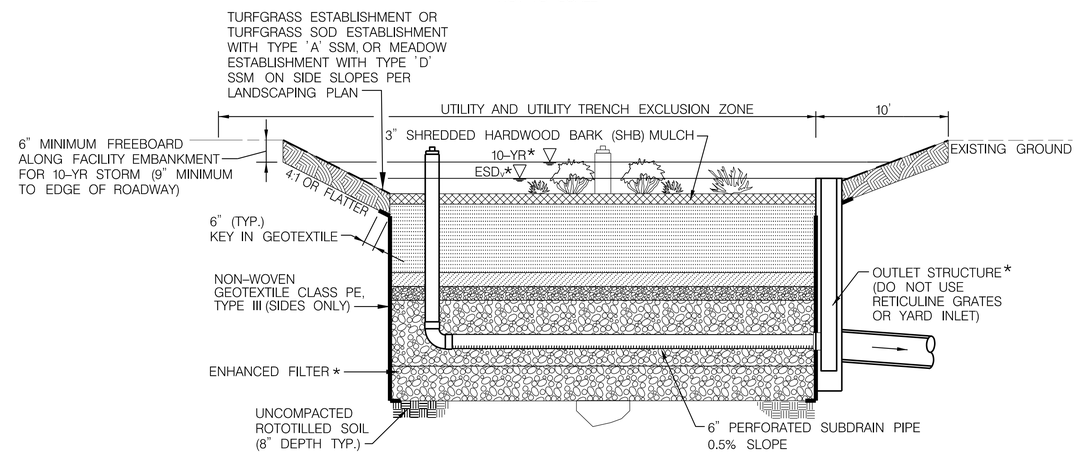

MICRO-BIORETENTION PROFILE WITH ENHANCED FILTER AND PIPE OUTFALL

NOT TO SCALE

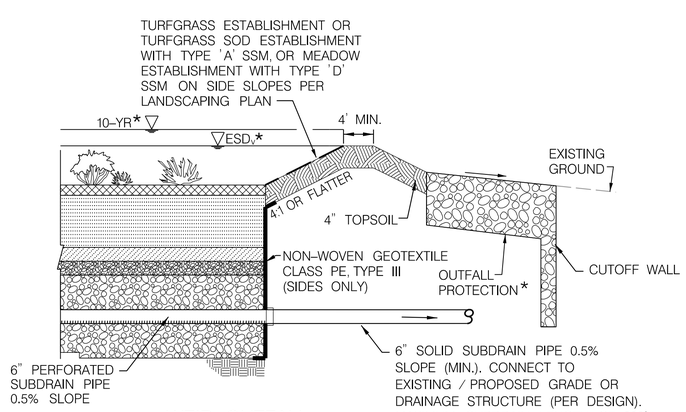

WEIR OUTFALL

NOT TO SCALE

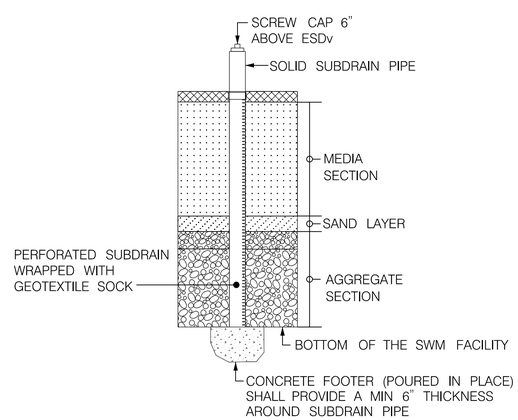

TYPICAL OBSERVATION WELL DETAIL

NOT TO SCALE

OBSERVATION WELL NOTES:

1. COST OF CONCRETE FOOTER AND GEOTEXTILE SOCK ARE INCIDENTAL TO THE COST OF THE SUBDRAIN ITEM AS USED FOR THE OBSERVATION WELL.
2. SEE SECTION 316 OF THE MDOT SHA STANDARD SPECIFICATIONS FOR CONSTRUCTION AND MATERIALS.

DESIGNER NOTES:

1. REFER TO SECTION 316 OF THE MDOT SHA STANDARD SPECIFICATIONS FOR CONSTRUCTION AND MATERIALS FOR MORE INFORMATION.
2. INCLUDE SWMFAC NUMBER ON SWM SHEETS.
3. MAX. ESDv DEPTH: 12".
4. IF ENHANCED FILTER IS REQUIRED, PROVIDE ADDITIONAL NO. 57 AGGREGATE DEPTH FOR RECHARGE PER PRACTICE M-9.
5. UTILITY (INCLUDING GUY-WIRES) AND UTILITY TRENCH EXCLUSION ZONE EXTENDS A MINIMUM OF 10 FEET FROM THE BOTTOM OF MEDIA. 10 FEET FROM TOP OF EMBANKMENT IS PREFERABLE.
6. SUBDRAIN TO CONNECT TO INLET OR OPEN OUTFALL. PROVIDE RODENT SCREEN WHEN SUBDRAIN IS AN OPEN OUTFALL.
7. PLANT FACILITY SURFACE WITH AT LEAST THREE SPECIES FROM THE APPROVED PLANTING LIST.
8. DO NOT PLACE SEED, SOD, OR SSM ON THE BOTTOM SURFACE OF FACILITY.
9. REFER TO OBSERVATION WELL DETAIL.
10. ALL SUBDRAINS, CLEANOUTS, OBSERVATION WELLS, AND OUTFALLS SHOULD BE SHOWN ON PLAN VIEW DRAWINGS.
11. THE PREFERRED SLOPE OF LONGITUDINAL SUBDRAIN PIPE IS 0.5%. THE NO. 57 AGGREGATE LAYER MAY NEED TO EXTEND DEEPER THAN 18" TO ACCOMMODATE LENGTHY SUBDRAIN PIPES.

* DETERMINE BY DESIGN

MARYLAND DEPARTMENT OF TRANSPORTATION
STATE HIGHWAY ADMINISTRATION

DESIGN GUIDANCE DRAWING

M-6 MICRO-BIORETENTION FOR POORLY DRAINING SOILS

REVISION DATE: JUNE 1, 2022

*** NOTE: THIS DRAWING IS ONLY TO BE USED AS A DESIGN GUIDE AND IS NOT A SUBSTITUTE FOR PROJECT-SPECIFIC PROFILES AND SECTIONS IN CONTRACT DOCUMENTS***